PONTON MODULÁRNÍ 116 x 155 cm

SKU: PONBPODST39

Cena s DPH: 1 857,30 PLN

Cena bez DPH: 1 510,00 PLN

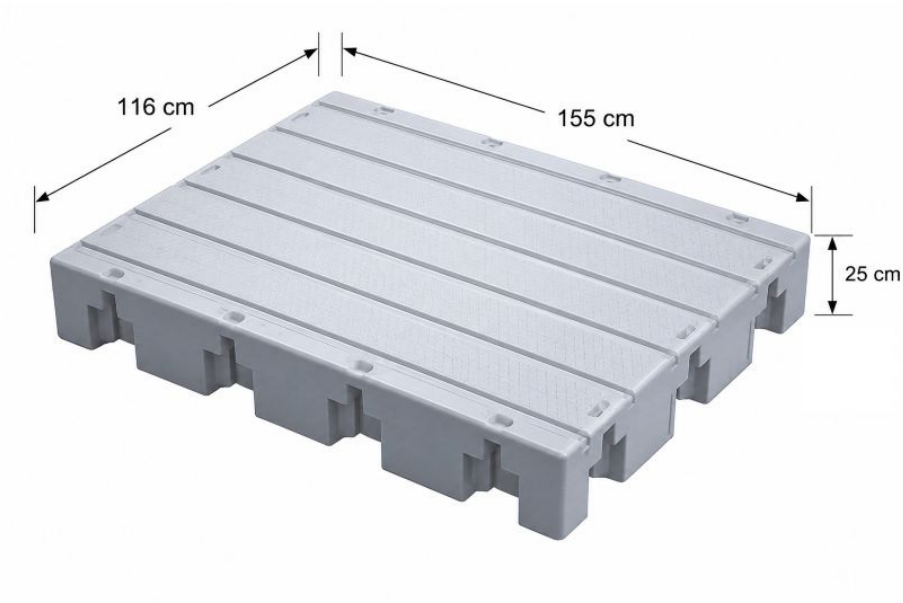

Technická specifikace

Atribut	Hodnota
Přemístění	320 l
Dimenze	116 x 155 x 25 cm
Kolik modulů v sadě?	1
Barva	Šedá
Materiál	Polyethylen (PE)
Hmotnost	39 kg
Užitná plocha	1,8 qm
Doba dodání	3-7 dní
Doba výroby 100 kusů	20 days

Popis

Low-Freeboard Modular Platform

Low-freeboard modular platforms are an ideal solution designed primarily for kayakers and rowers, as well as wherever the platform level needs to be low above the water surface. The platform's design focuses on functionality, durability, and aesthetics, offering easy access to the water and harmonious integration with the surroundings.

We also offer additional elements designed to work with the polyethylene platform components, such as:

-Metal screw-in anchoring poles
-Guardrails
-Swimming ladders
-Gangways
-Cleats
-Screws, washers, and threaded sockets embedded in the plastic components are made of stainless steel, ensuring durability and corrosion resistance.

Product Advantages:

Ease of assembly and flexibility: Quick and simple assembly and disassembly. Ability to easily change the configuration, location, and expansion of the platform depending on needs.
Durability and aesthetics: The platforms are made of weather-resistant materials, guaranteeing a long lifespan without the need for maintenance, unlike wooden piers. They maintain an aesthetic appearance for years.
Stable and safe construction: High buoyancy ensures platform stability, and the non-slip surface increases safety of use.
Versatile application: Wide range of applications makes these platforms ideal not only for water sports but also for other purposes where a low-lying platform is needed.
Longevity: Materials used in production ensure a long product life.
UV radiation resistance: The platforms are resistant to the harmful effects of sunlight, which prevents fading and material degradation.
No building permit required: Platforms do not require a building permit, which significantly simplifies the installation process.

Basic modul description:

Dimensions: W / L / H = 155 x 232 x 25 cm

Weight: 72 kg

Maximum load with permanent buoyancy: 640 kg

Usable area: 3.6 m2

Color: gray